Dear users,

Please read the instructions carefully before you use the product.

◆ Survey

With a long history,the factory always devotes itself to scientific enterprise management and advanced technology and has made several reforms on the product.In recent years,it constantly consults users for their opinions,adopts new glue binding technology.The product is not only antivibration,but also is well sealed. Besides, it can effectively prevent working deformation, get rid of leakage,stabilize quality,increase efficiency,simplify parts and lower cost.

The pliers is a manual hydraulic style with built-in speeding-up apparatus. It has the characteristics of automatic pressure-adjusting,high working efficiency, reliable performance, simple maintenance and repair, easy operation and no limir of direction.Therefore, it's an ideal new-type tool for intermediate connection and sealing end during installing power equipment,luminaire and cable.

The product carries out the policy of" Three responsibilities" ,undertakes packing and consignment of goods,Welcome you to consult us and have business talk with us.

◆ Technical Parameters

Model No.		YQK-70	YQK-120	YQK-240	YQK-300
Compression joint range	Aluminium material	4-70	10-120	16-240	16-300
	Copper material	4-50	10-95	16-185	16-240
Max. working pressure		5	12	16	16
Max. working stroke		12	14	22	22
Overall dimension		300X95X65	400X105X65	460X110X68	510X135X80
Weight		1.8	2.5	3.4	4.5
Hexangular die arrangement		4.6.8.10.16.25.35 50.70	10.16.25.35 50.70.95.120	16.25.35.50.70 92.120.150.185.240	16.25.35.50.70.95 120.150.185.240.300
Hydraulic oil			32# lubricant		

◆ Working Principle

Choose matching mould, throw handle ① of hydraulic pliers to make oil pump core ② go up.At the moment, oil-in valve ③ is opened.When handle ① is pushed down, oil-in valve ④ is opened to feed oil, then oil pressure pushes piston ⑤ to compress oil return spring ⑦ and moving die advances till two dies touch slightly. Then, loosen oil return screw ⑨ (not loosening too much)to make spill valve⑧ open.Due to the elasticity action of oil return spring ⑦ oil will flow back into oil storage pipe,namely moving die resets.If compression joint copper cover,please make an annealing treatment on copper cover first to guarantee the quality of compression joint.

◆ Points for attention

1. During compression-jointing wire,just stop compression when upper and lower dies have touched each other slightly. Otherwise,extra-compression will damage parls.
2. During using wire pliers, knocking at pliers head and die is prohibited to avoid deformation and damage.
3. Wire is not suitable for being used in acid, alkali and corrosive gas.
4. Wire pliers must keep enough filtered and clean 32# lubricant.

◆ Repair & Maintenance

Someone should take care of the tool. Dont't knock it and never let it collide with other things. During operating, don't add extra-presure on handle. When store it,please loosen oil return screw.If it won't be used for a long time,it should be wiped clean and the surface should be coated with antirusting grease.Don't disassemble the product at will,as it has a compact structure.In case of dismounting, should pay attention to the cleanness of site and prevent dust and impurity from entering.During use,it's a normal phenomenon that there is a little oil arising on plunger piston and piston.After long-term use,quantity of oil will decrease, and should turn and dismount the setting handle first,then revolve screw of pipe tail,swing the handle to compress a little oil into cylinder,then fill up hydraulic oil(oil must be filtered clean by 200-mesh net),then put on screw of pipe tail (not too tight),and open oil return screw till a little oil overflow to exhaust air thoroughly.At last,tight up screw of pipe tail,wipe oil overflowed clean and fix the setting handle well.

If piston has a phenomenon of advancing or backing,it may be due to bad sealing of valve and there is air in oil.If piston cannot reset,then its big spring is deformed of broken.If there is serious oil leakage on piston and plunger piston,you should disassemble it for cleaning or replacing and remove air(according to oil-filling method),then reinstall it well.

YQK Series

Manual Hydraulic Pliers

Operation & Maintenance Instructions

◆ Structure diagram

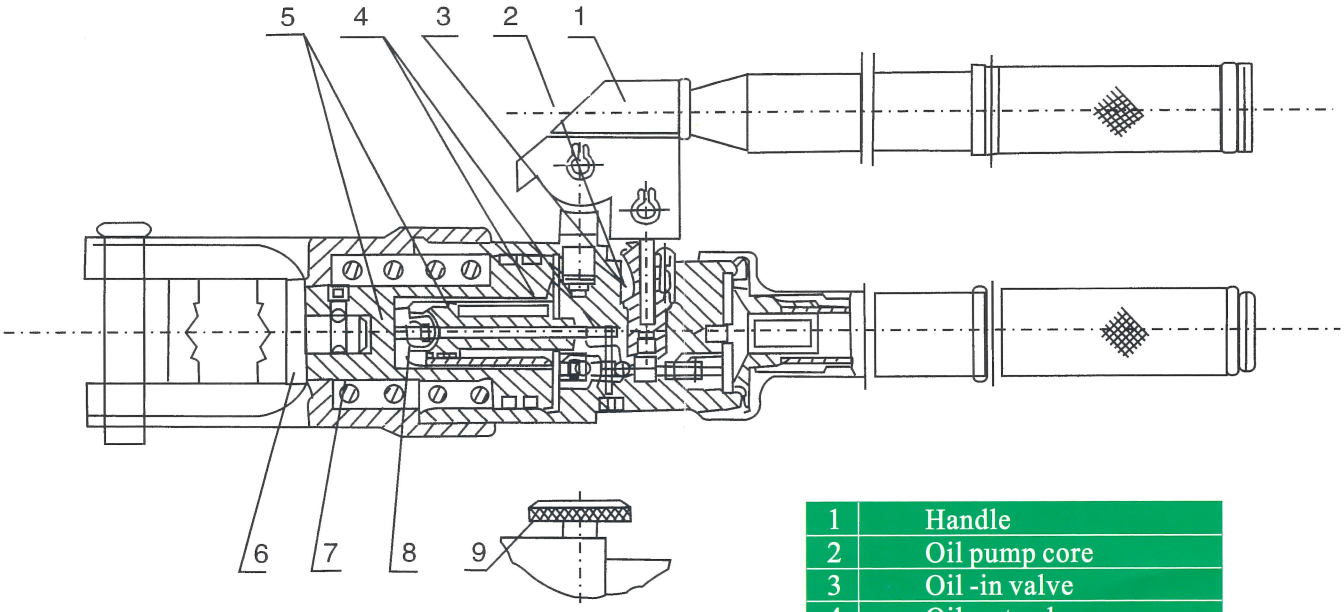

1	Handle
2	Oil pump core
3	Oil -in valve
4	Oil-out valve
5	Piston
6	Die
7	Oil return spring
8	Oil return valve
9	Oil return screw